MARIOT® KITCHEN EQUIPMENT

DATA SHEET

SQ04M0G0

BAKERY OVEN 4 TRAYS 600 x 400 - GN 1/1
MECHANICAL CONTROL

FUNCTIONAL CHARACTERISTICS	
Display	Analogic
Supply	Electric
Timer	Logarithmic
Number of motors	2
Motor speeds	1
Max cooking temperature	280°C
Core probe	-
Cooking chamber material	AISI304
Opening door	Right handle
Chimney	50mm motorized
Humidification	Direct injection
Air injection	-
Version	Standard / 30A Contactors
Self-washing	-

+9714 2 88 2777 admin@mariotkitchen.com
www.mariotstore.com

VENIX Food Service Equipments

STANDARDS		
Cer tification	CE - CB	
TRAYS		
Trays rack	Wire PA-BIV 4/80 Sheet PA 4/85 (optional)	
Max tray load	4kg	
DIMENSIONS		
Oven size with handle WxDxH	937 x 885 x 725 mm	
Oven size without handle WxDxH	937 x 821 x 725 mm	
Chamber size WxDxH	660 x 490 x 452 mm	
Unit weight	86kg	
PACKAGING		
Packaging	Pallet + carton box	
Packaging size WxDxH	1020 x 970 x 847 mm	
Unit weight with packaging	105kg	
Crate packaging size (optional)	1020 x 970 x 877 mm	
ELECTRICAL DATA		
HEATERS 5kW 50Hz		
Power	10,4kW	10,5kW
Frequency	50Hz	50Hz
Power supply	380-415V 3N~ / 220-240V 3~	220-240V~
Amperage	16,3A / 26,6A	46A
Power cord req.	5G4 / 4G4	3G16
HEATERS 6.5kW 50Hz		
Power	12,3kW	
Frequency	50Hz	
Power supply	380-415V 3N~ / 220-240V 3~	
Amperage	19,1A / 31,51A	
Power cord req.	5G4 / 4G6	
WATER CONNECTION REQUIREMENTS		
Humidification Water Inlet	3/4" GAS (male)	
Washing Water Inlet	8mm quick fitting	
Water drain	30mm	
Max water hardness	5°f	
Water pressure requirement min-max	150-200kPa	

CONSUMPTION	
Humidification Water	7,8l/h max consumption
Rinse Water @2barG	-
Short Washing Water @2barG	-
Long Washing Water @2barG	-
Short Washing Detergent *	-
Long Washing Detergent *	-
CONNECTIVITY	
USB	-
Bluetooth	-
Wi-Fi	-
Cloud	-
ACCESSORIES	
Self clean system kit	-
Oven stand	TA9374H30X TA9374H40X - TA9374H40S TA9374H49X - TA9374H49S TA9374H70X-TA9374H70S TA9374H80X-TA9374H80S
Hood (Air)	POSQMAF1 - POSQMAF2
Hood (Water)	POSQMWF1 - POSQMWF2
External Core probe	-
Sous vide probe	-
Proofer	CA9308M0 - MH - DH CA9312M0 - MH - DH
Stacking kit for 2 ovens	SK42
Smoker	SMK02
Blast Chiller	KDA03 - KDA05
Blast chiller stacking kit	SK43
Water softner cover	WS10
Water softner 6800l	WS11
Water softner 12000l	WS12
Water pressure adapter	WPA
Water shower kit	S1
Detergent 6kg	DT2
Detergent 10kg	DT4

◆ Standard ◇ Optional - Not available

TYPE OF COOKINGS	
Convection cooking	30°C - 260°C / 86°F - 500°F
Combi cooking	30°C - 230°C / 86°F - 446°F
Steaming cooking	30°C - 130°C / 86°F - 266°F -
Static cooking	-
Delta T cooking	-
Core probe cooking	
Sous vide cooking	-
Low temperature cooking	-
DISPLAY AND CONNECTIVITY	
Type of display	ANALOGIC
Multi-language display	-
Unit set F° or C°	◇
Venix cloud	-
Wi-fi	-
Ethernet port	-
Web server	-
Usb port	-
SETTINGS	
Infinity time set	◆
Chimney set	OPEN
Fan speed set	1
Dehumidification set	-
Humidity set	0-100%
Preheat set	MANUAL
RECIPE COOKING	
User recipes book	-
Factory recipes book	-
Cooking cycles	-
Recipes with name and picture	-
Fast recipe selection buttons	-
SPECIAL CYCLE	
Multi-level mix ALL IN	-
Multi-level mix ALL OUT	-
Food regeneration	-
Overnight cooking	-
Overnight self clean	-
Cook & hold	-

Multi-timer	-
Routine program	-
Proofing	-
Fast Cooling	-
Automatic washing system / Rinse	-
Fast start	-
Recipe scheduling	-
Holding / Mass production	-
TECHNICAL FEATURES	
Cooking chamber material	AISI304
Second core probe	-
Insertion of the trays	HORIZONTALLY
Fast loading Pro	-
Glass door	DOUBLE
Easy clean internal glass	◆
High performance thermal insulation	YES
Break drop nebulizer	◆
Lightning	-
Direct injection humidification	◆
Boiler humidification	NOT REVERSIBLE (RIGHT HANDLE)
Opening door	◆
Reversing fan	
Heavy duty reversing fan	
Phase cut speed control	◆
Inverter speed control	-
	-

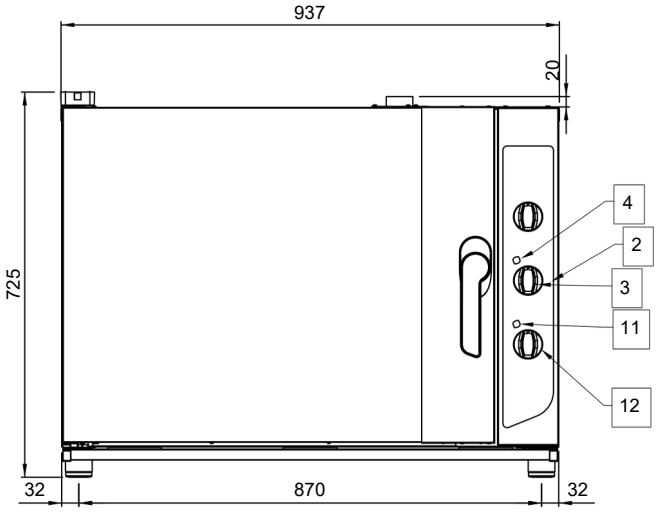

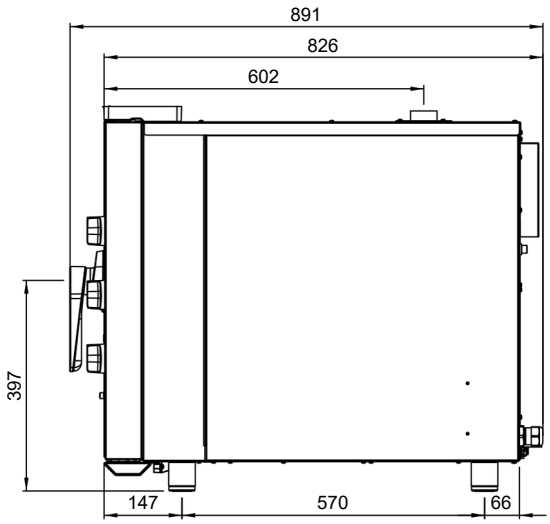

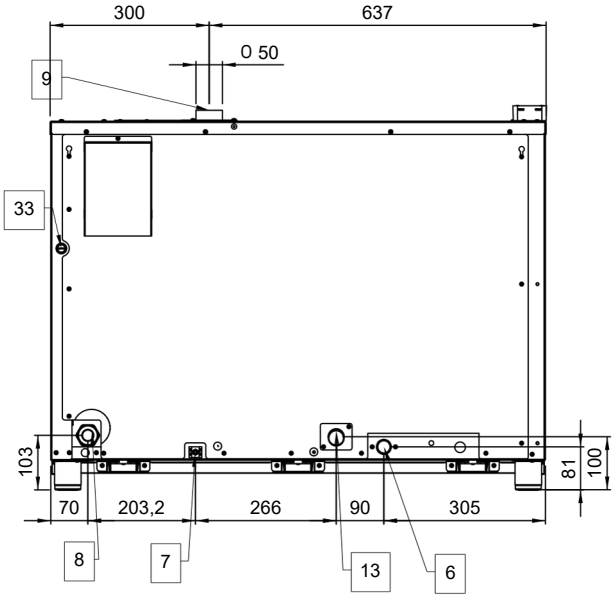

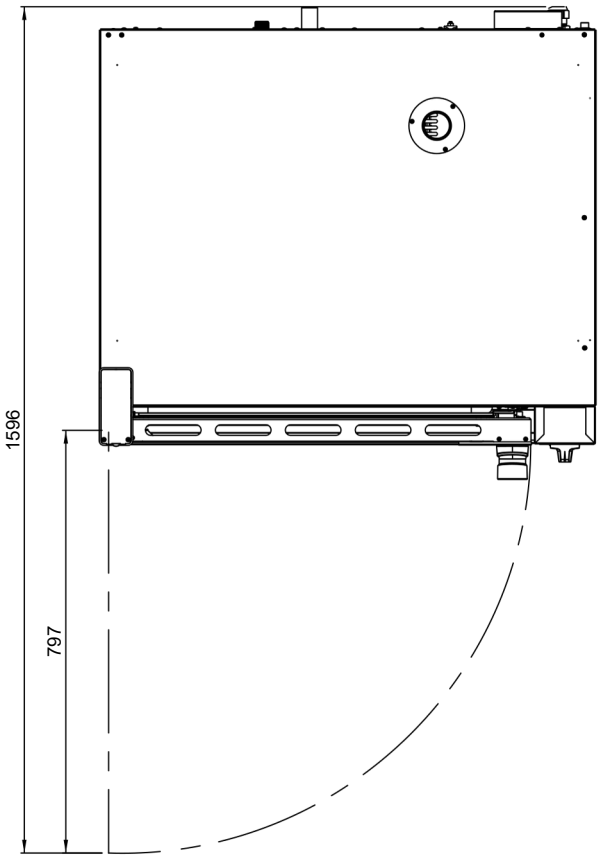

02.	TIMER SELECTOR
03.	TEMPERATURE SELECTOR
04.	LIGHT ON/OFF HEATING ELEMENT
06.	HUMIDIFY SOLENOID VALVE 3/4” BSP (GAS)
07.	UNIPOTENTIAL TERMINAL
08.	COMPRESSION CABLE GLAND

09.	HOT FUMES EXHAUST CHIMNEY
11.	STEAM LED
12.	STEAM SELECTOR
13.	DRAIN PIPE
33.	SAFETY THERMOSTAT