MARIOT®
KITCHEN EQUIPMENT

DATA SHEET

SQ10TCC

BAKERY OVEN 10 TRAYS 600 x 400 - GN 1/1
5" CAPACITIVE TOUCH CONTROL
SELF CLEAN INTEGRATED

FUNCTIONAL CHARACTERISTICS	
Display	5" CAPACITIVE TOUCH
Supply	Electric
Timer	-
Number of motors	3
Motor speeds	2
Max cooking temperature	260°C
Core probe	Single point PT1000
Cooking chamber material	AISI304
Opening door	Right handle
Chimney	50mm motorized
Humidification	Direct injection
Air injection	-
Version	Standard / 30A Contactors
Self-washing	Automatic

+9714 2 88 2777 admin@mariotkitchen.com
www.mariotstore.com

VENIX Food Service Equipments

STANDARDS		
Cer tification	CE - CB	
TRAYS		
Trays rack	Wire PA-BIV 10/80 Sheet PA 10/85 (optional)	
Max tray load	4kg	
DIMENSIONS		
Oven size with handle WxDxH	937 x 890 x 1220 mm	
Oven size without handle WxDxH	937 x 827 x 1220 mm	
Chamber size WxDxH	660 x 490 x 948 mm	
Unit weight	135kg	
PACKAGING		
Packaging	Pallet + carton box	
Packaging size WxDxH	1020 x 970 x 1342 mm	
Unit weight with packaging	153kg	
Crate packaging size (optional)	1020 x 970 x 1370 mm	
ELECTRICAL DATA		
HEATERS 5kW 50Hz		
Power	15,7kW	15,5kW
Frequency	50Hz	50Hz
Power supply	380-415V 3N~ / 220-240V 3~	3N~/220-240V 1~
Amperage	24,9A / 40,38A	68A
Power cord req.	5G4 / 4G10	3G25
HEATERS 5kW 60Hz		
Power	16,2kW	15,7kW
Frequency	60Hz	60Hz
Power supply	380-415V 3N~ / 220-240V 3~	3N~/220-240V 1~
Amperage	26,85A / 42,09A	70A
Power cord req.	5G4 / 4G10	3G25
HEATERS 6.5kW 50Hz		
Power	18,6kW	
Frequency	50Hz	
Power supply	380-415V 3N~	
Amperage	29,2A	
Power cord req.	5G6	

HEATERS 6.5kW 60Hz	
Power	19,1kW
Frequency	60Hz
Power supply	380-415V 3N~
Amperage	31,1A
Power cord req.	5G6

WATER CONNECTION REQUIREMENTS	
Humidification Water Inlet	3/4" GAS
Washing Water Inlet	8mm quick fitting
Water drain	30mm
Max water hardness	5°f
Water pressure requirement min-max	150-200kPa

CONSUMPTION	
Humidification Water	4l/h max consumption
Rinse Water @2barG	7,9l
Short Washing Water @2barG	24,9l
Long Washing Water @2barG	31,1l
Short Washing Detergent *	70,3g
Long Washing Detergent *	140,6g

CONNECTIVITY	
USB	USB 2.0
Bluetooth	-
Wi-Fi	-
Cloud	-

ACCESSORIES	
Self clean system kit	-
Oven stand	TA9374H30X TA9374H40X - TA9374H40S TA9374H49X - TA9374H49S TA9374H70X-TA9374H70S TA9374H80X-TA9374H80S
Hood (Air)	POSQMAF1 - POSQMAF2
Hood (Water)	POSQMWF1 - POSQMWF2
External Core probe	-
Sous vide probe	-
Proofer	CA9308M0 - MH - DH CA9312M0 - MH - DH

Stacking kit for 2 ovens	SK42
Smoker	SMK02
Blast Chiller	KDA03 - KDA05
Blast chiller stacking kit	SK43
Water softner cover	WS10
Water softner 6800l	WS11
Water softner 12000l	WS12
Water pressure adapter	WPA
Water shower kit	S1
Detergent 6kg	DT2
Detergent 10kg	DT4

◆ Standard ◇ Optional - Not available

TYPE OF COOKINGS	
Convection cooking	30°C - 260°C / 86°F - 500°F 30°C
Combi cooking	- 230°C / 86°F - 446°F 30°C -
Steaming cooking	130°C / 86°F - 266°F
Static cooking	-
Delta T cooking	5°C - 115°C Δ / 41 °F - 239 °F Δ
Core probe cooking	◆
Sous vide cooking	◆
Low temperature cooking	◆
DISPLAY AND CONNECTIVITY	
Type of display	5" TOUCH
Multi-language display	◆
Unit set F° or C°	◆
Venix cloud	-
Wi-fi	-
Ethernet port	-
Web server	-
Usb port	◆
SETTINGS	
Infinity time set	◆
Chimney set	OPEN - CLOSE
Fan speed set	2
Dehumidification set	-
Humidity set	0-100%
Preheat set	AUTOMATIC
RECIPE COOKING	
User recipes book	120
Factory recipes book	◆
Cooking cycles	6
Recipes with name and picture	◆
Fast recipe selection buttons	-
SPECIAL CYCLE	
Multi-level mix ALL IN	◆
Multi-level mix ALL OUT	◆
Food regeneration	◆
Overnight cooking	◆
Overnight self clean	◆
Cook & hold	-

Multi-timer	◆
Routine program	-
Proofing	◆
Fast Cooling	◆
Automatic washing system / Rinse	◆
Fast start	-
Recipe scheduling	◆
Holding / Mass production	
TECHNICAL FEATURES	
Cooking chamber material	AISI 304
Second core probe	-
Insertion of the trays	HORIZONTALLY
Fast loading Pro	-
Glass door	DOUBLE
Easy clean internal glass	◆
High performance thermal insulation	YES
Break drop nebulizer	◆
Lightning	LED ON THE DOOR
Direct injection humidification	◆
Boiler humidification	-
Opening door	NOT REVERSIBLE (RIGHT HANDLE)
Reversing fan	◆
Heavy duty reversing fan	
Phase cut speed control	◆
Inverter speed control	◆
	-

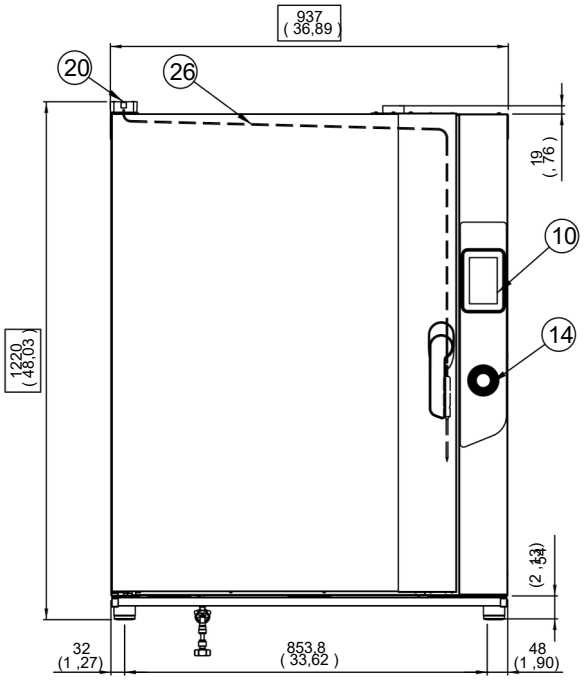

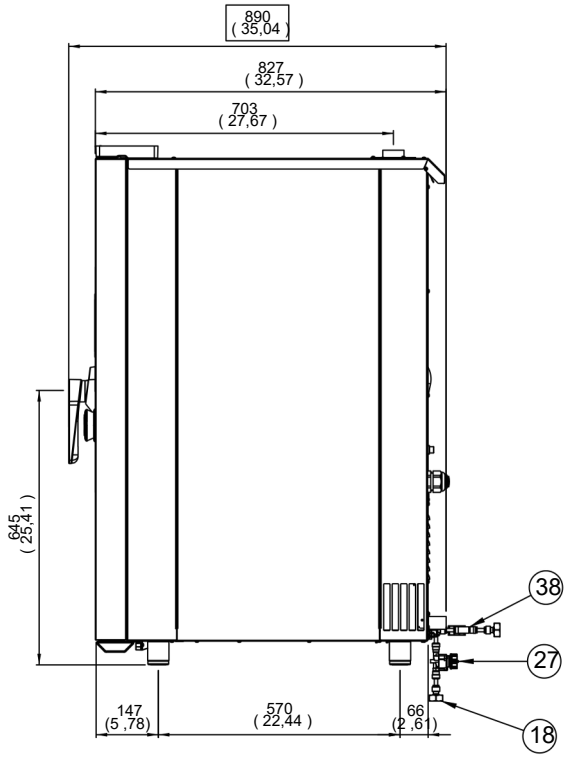

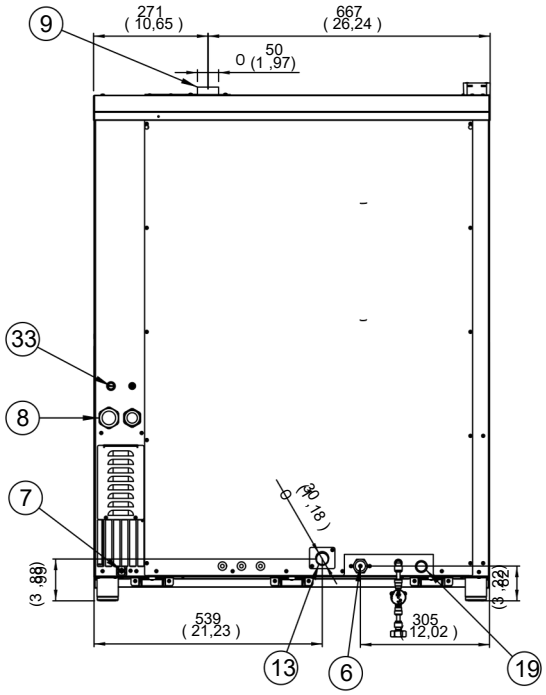

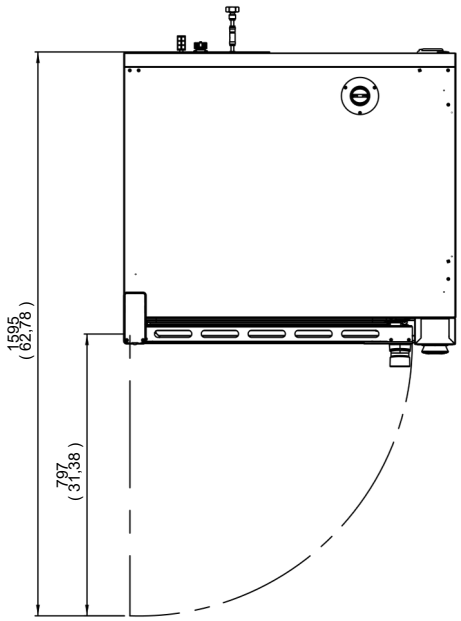

06.	HUMIDIFY SOLENOID VALVE 3/4 BSP (GAS)
07.	UNIPOTENTIAL TERMINAL
08.	COMPRESSION CABLE GLAND
09.	HOT FUMES EXHAUST CHIMNEY
10.	DIGITAL CONTROL
13.	DRAIN PIPE
14.	ENCODER KNOB
18.	WATER WASHING SYSTEM 3/4” BPS (GAS)

19.	DEGREASING DETERGENT WASHING SYSTEM
20.	USB CONNECTION
26.	CORE PROBE IN-LET
27.	WATER FILTER
33.	SAFETY THERMOSTAT
38.	CHECK VALVE