SERVER • ESSENTIALS •

MARIOT® KITCHEN EQUIPMENT

Twin Warmers
Twin Topping Warmers | Export

SPECIFICATION SHEET



FAST FACTS

Twin Topping Warmers keep toppings, dipping sauces and gravies at peak flavor with individual temperature control and even heating. Serve from #10 food cans or 2.8 L jars with pumps.

APPLICATIONS

- Twin water-bath wells heat sweet and savory toppings to the ideal temperature from the first serving to the last
- Models with portion-controlled pumps for truly consistent servings, ladles for thick and chunky sauces or one of each

DETAILS

- Independently warm and serve two #10 topping cans or 2.8 L jars in only 43.2 cm of countertop
- Dips, sauces and gravies are served at their peak flavor with temperature-controlled thermostats to turn each wrap-around heating element on or off as needed
- Water fill lines eliminate overflow accidents
- Serve with stainless steel pumps, ladles or one of each; pump dispenses 30 mL max and adjusts in 3.7 mL increments
- Coordinate pump or lid knobs with store theme or contents within; specify color and text when ordering
- Adaptable to hold a Squeeze Bottle Inset Kit 86819 with (3) 480 mL bottles



Twin FS/FSP 81230



FS Option: SST Jar 94009



Option: Squeeze Bottle Inset Kit 86819; Single Bottle 86809

Critical to Proper Operation | Water-Bath Spacer 82063 (included)



©2026 Server Products Inc. | 09.2026 | 02051

MARIOT®
KITCHEN EQUIPMENT

Even heating. Even better toppings.

TWIN TOPPING WARMERS MODEL: TWIN FSP

Server model Twin FSP Topping Warmers are a stainless steel, rethermalizing water-bath warmer. Each well is powered individually by an ON/OFF rocker switch with temperature settings on the knob. Temperatures range from 38°C to 93°C. Temperature-sensing thermostats control each 500-watt, wrap-around heating element, turning it off and on as needed. Twin FSP model includes (2) stainless steel pumps, 81320, to dispense 30 mL servings, reduces in 3.7 mL increments. Each hold (2) #10 food cans or 2.8 L jars (94009 jar sold separately). 230V AC 8.3-A, 1000 Watts. 2-year warranty.

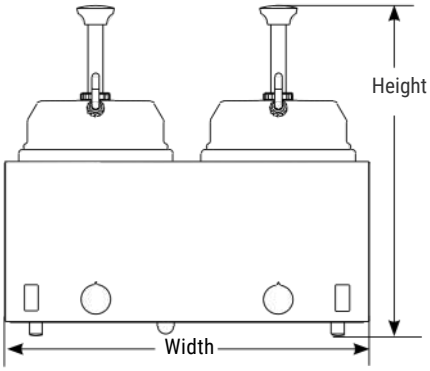

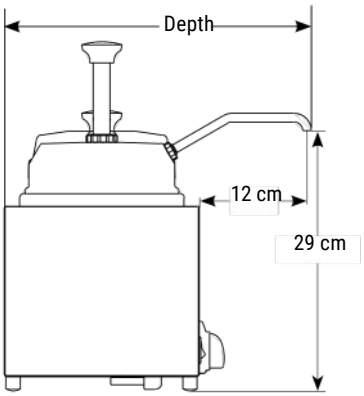

TOPPING WARMERS

order amt	model/item	description	capacity	dims (H x W x D)	plug	electrical	watts	weight
☐	Twin FSP 81260	twin warmer with (2) pumps 81320	(2) #10 cans or 2.8 L jars 94009 (not included)	39.4 x 43.2 x 34.3 cm	EURO	230 V 8.3 A	1000	10 kg
☐	Twin FSP 84990	twin warmer with (2) pumps 81320			UK			

ACCESSORIES

order amt	item	description
☐	94009	stainless steel 2.8 L jar
☐	82063	water-bath spacer
☐	81320	topping pump

order amt	item	description
☐	86819	squeeze bottle inset kit with (3) 16 oz, high-temp bottles
☐	86809	16-oz squeeze bottle, high-temp

KEEP YOUR MENU FRESH WITH Twin Warmers
Twin Topping Warmers | Export
www.mariotstore.com | +971 4 288 2777 | +971 50 311 4080

SERVER
INTELLIGENT BY DESIGN

©2026 Server Products Inc. | 09.2026 | 02051